REVISIONS		
REV.	DESCRIPTION	DATE
A	UPDATE DRAWING TO 2025 STANDARDS	10/23/2025
B	REFINE DIMENSIONS AND DECIMAL PRECISION	12/15/2025
C	UPDATE TOLERANCE TABLE	12/29/2025

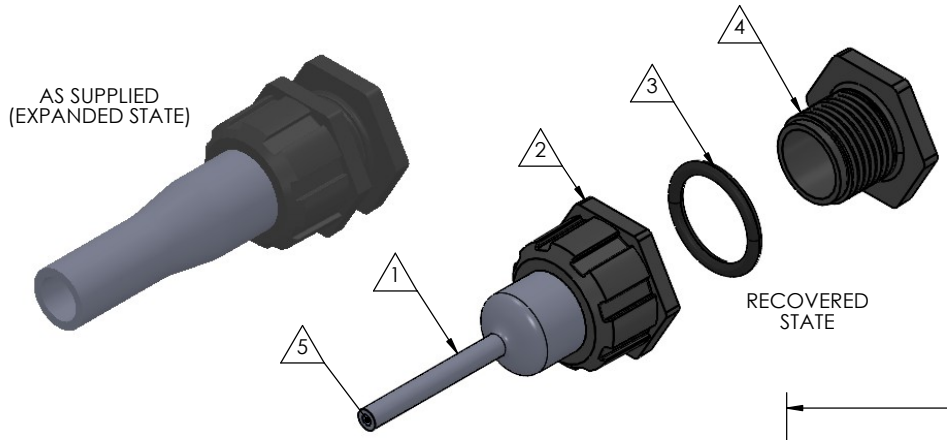

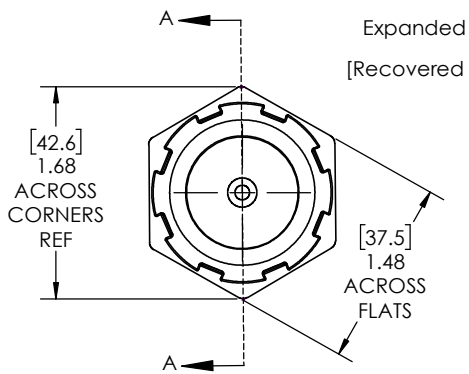

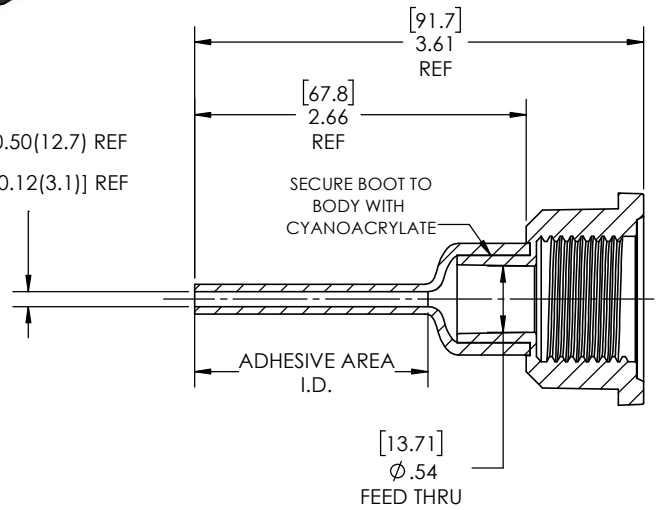

SECTION A-A
RECOVERED
SCALE 1:1

NOTE: REFERENCE FOR SEAL ASSEMBLY INSTALLATION:
ASSEMBLY MAY BE INSTALLED IN PANELS FROM
0.07"(1.8mm) - 0.38"(9.7mm).
RECCOMENDED DRILL HOLE DIAMETER
OF 1.00" (25.4mm)

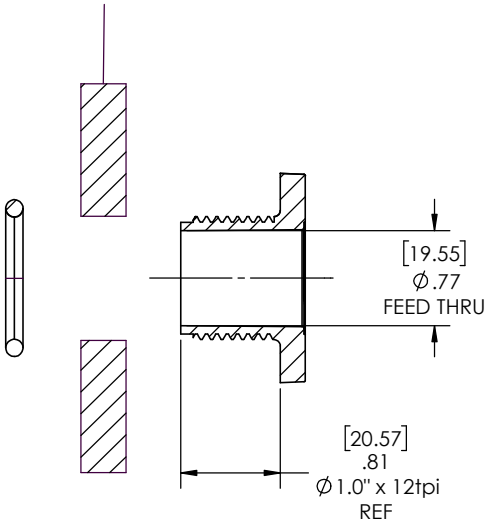

NOTES:

1. ITEM#1 HEAT SHRINKABLE BOOT MATERIAL IS IN ACCORDANCE WITH POLYOLEFIN STANDARDS DEFINED IN SAE AS81765/1 REFERENCE DIMENSIONS MAY DEVIATE AS MUCH AS +OR- 1/4"
2. FACTORY APPLIED HOT MELT ADHESIVE IS STANDARD

PROPRIETARY AND CONFIDENTIAL
THE INFORMATION CONTAINED IN THIS DRAWING IS THE SOLE PROPERTY OF Cross Technology INC. ANY REPRODUCTION IN PART OR AS A WHOLE WITHOUT THE WRITTEN PERMISSION OF Cross Technology INC. IS PROHIBITED.

ITEM	PART DESCRIPTION	PART NO.	MATERIAL
1	Heat-shrinkable boot	S-1 BOOT	Flame Retardant Polyolefin
2	Body	S-1B	Glass Fiber Reinforced, PBT
3	O-ring	AS-214	Buna
4	Nut	S-1/S-2N	Glass Fiber Reinforced, PBT
5	Adhesive		Hotmelt Polyamide

NU-TECH

UNLESS OTHERWISE SPECIFIED:
DIMENSIONS ARE IN INCHES
TOLERANCES:
FRACTIONAL ± 1/32
ONE DECIMAL PLACE ± 0.060
TWO DECIMAL PLACE ± 0.025
THREE DECIMAL PLACE ± 0.010

DO NOT SCALE DRAWING

PART NO. NUS-1
DWG. NO. NUS-1-ASSY
WEIGHT: 0.086
REV C
DRAWN: MLJ
DATE: 2/3/2026
SCALE: 1:1
SHEET 1 OF 1

Q:\Nu-Tech Engineering\Nu-Tech - Products and Components 2025\Assembly Drawings\NUS Single Leg Entry Seals\NUS-1\ NUS-1-ASSY