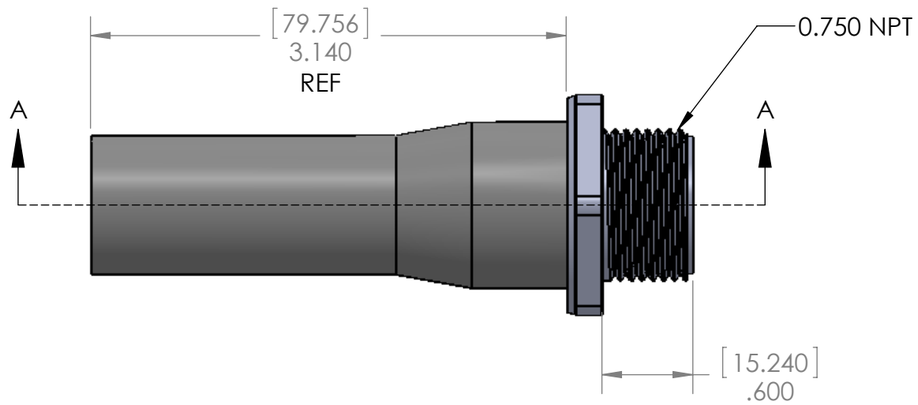

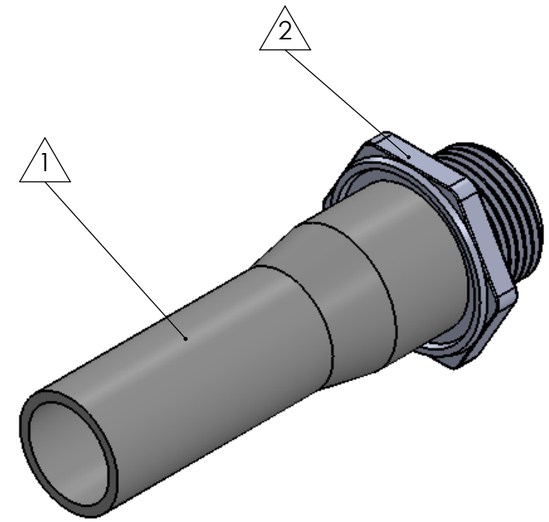

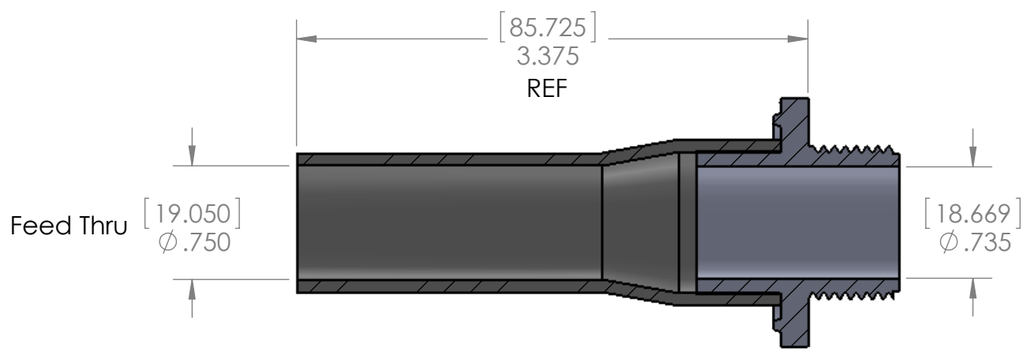

SECTION A-A

Expanded Min ID=0.750(19.05)
[Recovered Max ID=0.250(6.35)]

ITEM	PART DESCRIPTION	PART NO.	MATERIAL
1	Heat-shrinkable boot	M-1/4" x 3.50" Tube	HS 3123
2	Body	P-2B	Nylon
3	O-ring		Buna
4	Nut		Nylon
5	Adhesive	A-010	Hotmelt ADH
6			

Nu-Tech

UNLESS OTHERWISE SPECIFIED:

DIMENSIONS ARE IN INCHES
TOLERANCES:
FRACTIONAL ± 1/32
THREE PLACE DECIMAL ± 0.030

DO NOT SCALE DRAWING

DRAWN: HH DATE: 7/31/2014

PART NO. NUP-2

DWG. NO. PRP:"SW-Title"

WEIGHT: SW-Mass@part9.SLDPRT REV

SCALE: 1:1 SHEET 1 OF 1