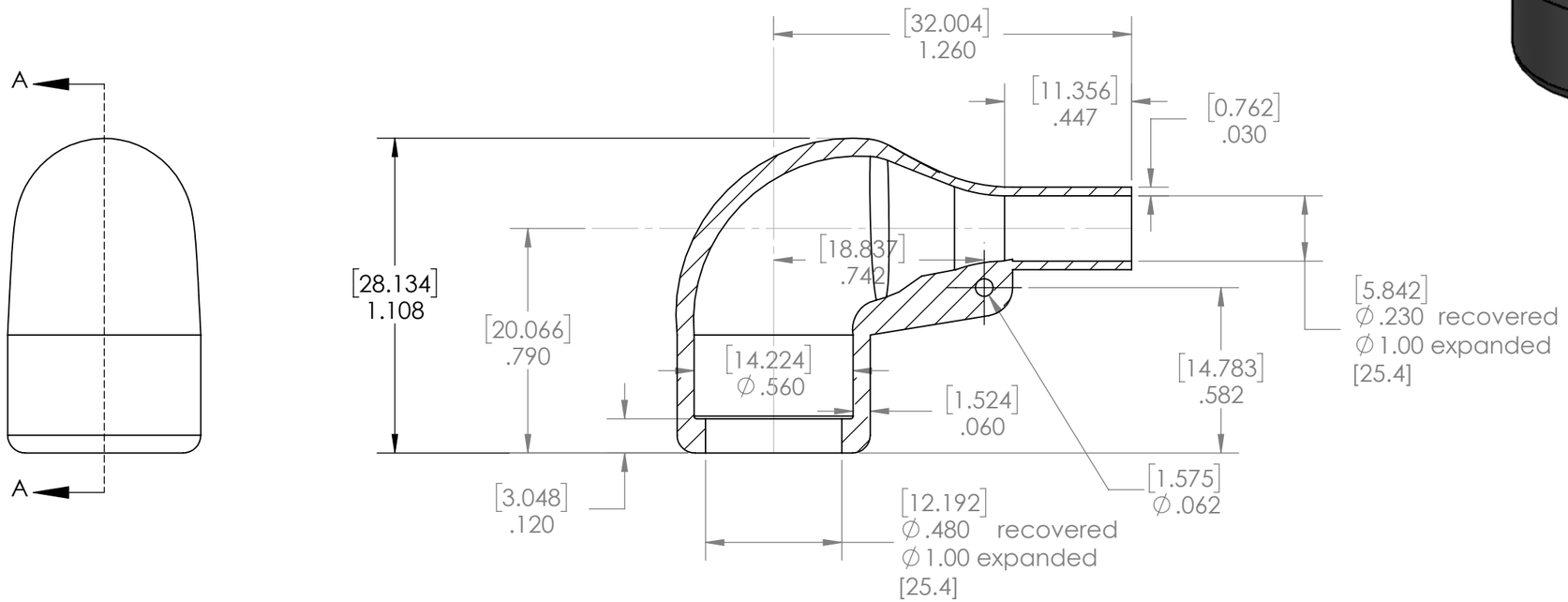

SECTION A-A

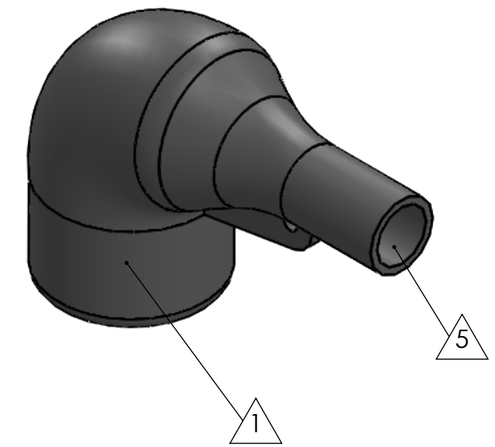

ITEM	PART DESCRIPTION	PART NO.	MATERIAL
1	Heat-shrinkable boot		HS 3123
5	Adhesive	A-010	Hotmelt ADH

Nu-Tech

UNLESS OTHERWISE SPECIFIED:

DIMENSIONS ARE IN INCHES
TOLERANCES:
FRACTIONAL ±1/32
THREE PLACE DECIMAL ± 0.030

DO NOT SCALE DRAWING

DRAWN: HH DATE: 7/9/2021

PART NO. NU0RL

DWG. NO. PRP:"SW-Title"

WEIGHT: SW-Mass@part9.SLDPRT REV

SCALE: 2:1 SHEET 1 OF 1